SUBMITTAL DATA

HANDED BY THE SEAT

FRONT VIEW

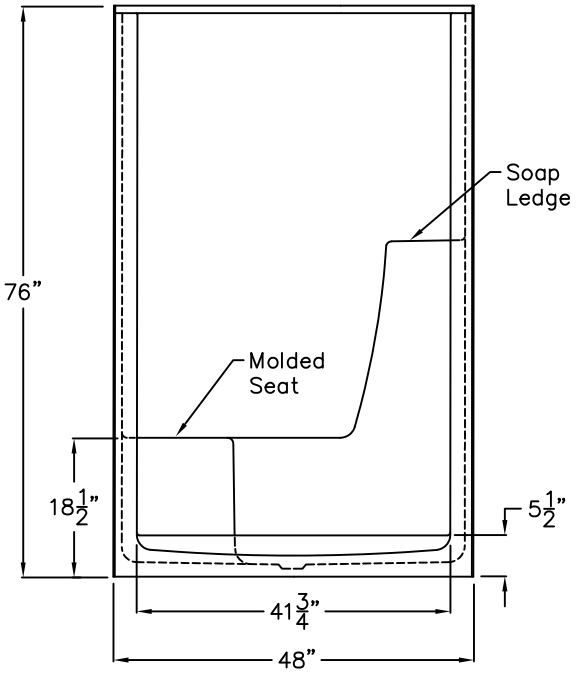

SIDE VIEW

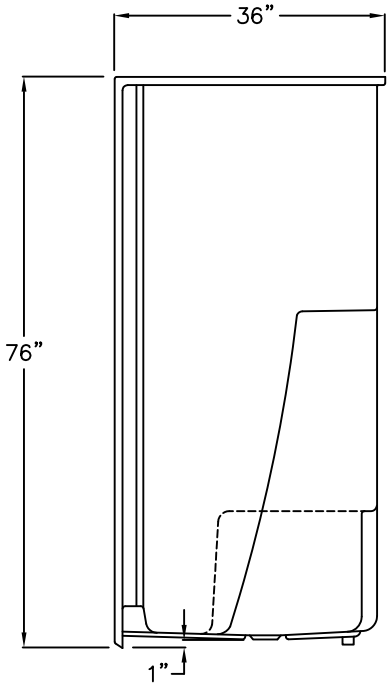

TOP VIEW

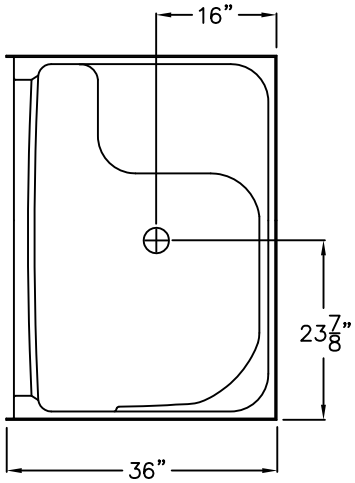

Applied Acrylic Shower

This shower enclosure shall be model 4801 with center drain. Finished surface shall be of a sanitary grade applied acrylic.

The unit shall have outside dimensions of 48" x 36" x 76".
The shower shall meet ANSI Z124.1.2, and FHA/HUD-UM-73A.

The enclosure shall be equipped with the following accessories:

1. Applied Acrylic Finish,
2. Center Drain Location,
3. Left or Right Molded Seat,
4. 5 1/2" Threshold Height,
5. Molded Soap Ledge,
6. Slip Resistant Bottom,
7. Standard Rough-In.

Job Name.	Approved By Print Name		Date	BATHCRAFT	
Project No.	Approved By Signature			Model No. 4801 Shower	
BATHCRAFT 1610 J.P. Rogers Drive Valdosta, GA 31601 Tel: 800.343.8295 Fax: 229.245.0994 www.bathcraft.com	Architect			Drawing No. 4801 Acrylic Shower	
	Engineer			Date Issued. 1-28-16	Revised. 12-9-16
	Rep			Material. Acrylic Surface	
	Wholesaler			Color.	
	Comments:			Dimensions are in inches. Due to the nature of the materials. Dimensions may vary +/- 1/2"	